DC/DC10SE

v.1.0

DC/DC 1A Step up / step down DC/DC converter with adjustable output voltage

EN**

Edition: 2 from 15.01.2016
Supercedes the edition: 1 from 26.08.2015

The module's features:

- The DC/DC voltage- step up / step down converter with adjustable output voltage
- Example of use: increasing voltage from 9,5V to 12V DC or lowering voltage from 16V to 9V DC
- The input voltage range: 9,5÷16V DC
- The output voltage range: 5÷15V DC
- The maximum load current 1A (12W)
- The PSU technical output indicating converter failure triggered by:
  - Short-circuit of the output
  - Output overload
- Protections:
  - Short-circuit protection SCP
  - Overload protection OLP
- High efficiency: 82%
- Optical LED indication
- Warranty – 2 years from the production date
- Mounting:
  - Mounting strip with adhesive tape
  - Mounting screws

Example of use of the DC/DC10SE step up / step down converter with adjustable output voltage.

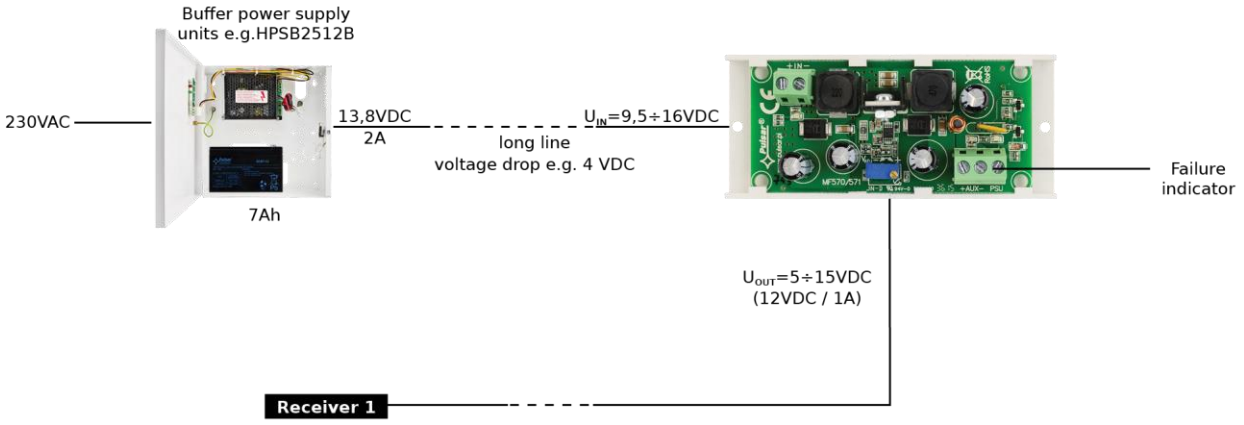

Schematic diagram of the converter operation.

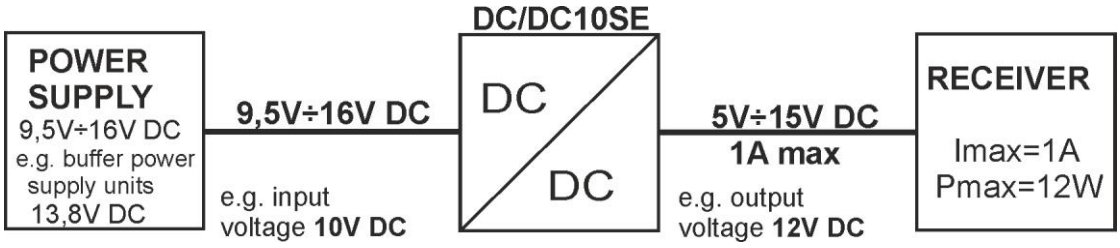

Adjustment of the converter output voltage: 5V÷15V DC, 1A max.

1. Technical description

The **DC/DC 1A** (**DC/DC10SE)** voltage- step up / step down converter is used for maintaining a constant output voltage in the range between **5÷15V DC,** adjusted with the **V_{ADJ}** potentiometer, regardless of the input voltage fluctuations in the range of 9,5V ÷ 16V. When the input voltage at the output is lower than needed, the converter increases it to the set value. When the input voltage at the output is higher than needed, the converter lowers it to the needed value set by the **V_{ADJ}** potentiometer. The maximum load current is **Imax=1A (Pmax=12W).** The module does not feature galvanic isolation between input/output (IN-AUX) and operates on common "ground" (0V) potential (IN- and AUX- terminals are galvanically connected = common terminal).

1.1. Block diagram (Fig.1).

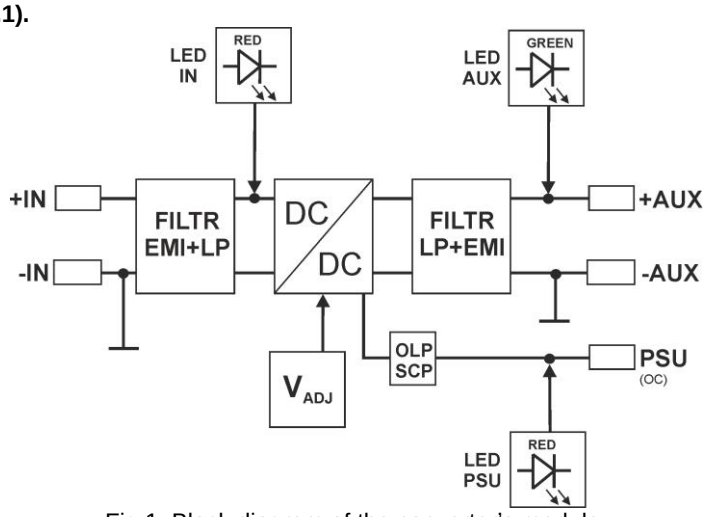

Fig.1. Block diagram of the converter's module.

1.2. Description of components and connectors (Fig. 2, Table 1, Table 2).

Table 1.

No. [fig.2]	Component's description
[1]	**IN LED** light **- red**
[2]	**Power connector of the DC/DC module**
[3]	**V_{ADJ}** voltage adjustment (5÷15V)
[4]	**AUX LED** light **– green**
[5]	**The DC/DC module's connector (power supply and PSU)**
[6]	**PSU LED** light **– red**
[7]	Mounting strip

Table 2.

[2], [5]	Description of module's connectors
+IN **- IN**	DC supply input (9,5V÷16V DC, power consumption from the power source)
+AUX **- AUX**	DC supply output (+AUX= +U, -AUX=GND)
PSU	Technical output of failure (OC type): OLP/SCP activation (short-circuit or overload protection) Failure status: hi-Z (high impedance), normal status: L (0V, GND)

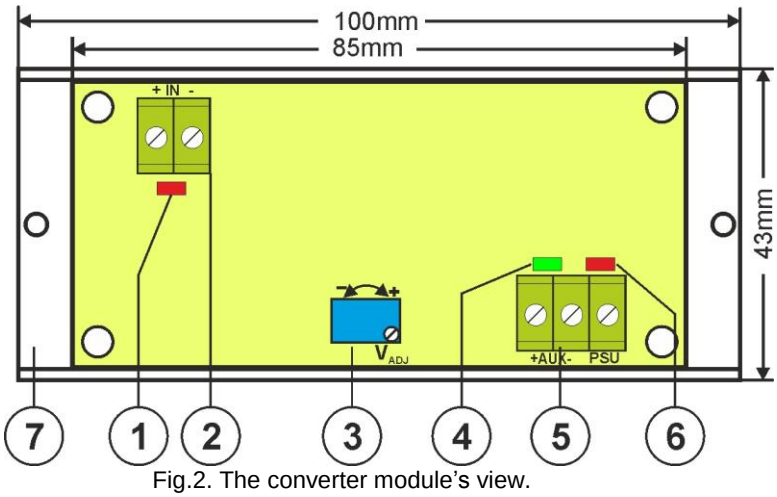

Fig.2. The converter module's view.

1.3. Technical parameters:

- Electrical parameters (Table 3)
- Mechanical parameters (Table 4)

Table 3.

The input voltage range (power supply)	9,5V÷16V DC
The output voltage range	5V÷15V, factory setting: 12V
P module power	12W max. (see fig. 3)
Energy efficiency	76%÷ 82%
Ripple voltage	60mV p-p max
Output current	1,0A max. (See fig. 3)
Current consumption by module systems	15 mA max.
Short-circuit protection SCP	electronic, automatic recovery
Overload protection OLP	110-150% of the module's power, manual restart (the failure requires disconnection of the DC output circuit)
Technical outputs **- PSU output indicating failure – overload or short-circuit in the AUX output**	- OC type, 50mA max. Failure status: hi-Z state (high impedance), normal status: L level (0V)
Optical indication **- IN LED indicating DC power status** **- AUX LED indicating DC supply status at the output** **- PSU LED indicating failure - overload or short-circuit in the AUX output**	- red, normal status: is lit continuously - green, normal status: is lit continuously - red, normal status: does not lit, failure: is lit continuously
Operating conditions	II environmental class, -10°C ÷40°C, ensure air flow around the unit for convection cooling
Declarations, Warranties	CE, 2 years from the production date

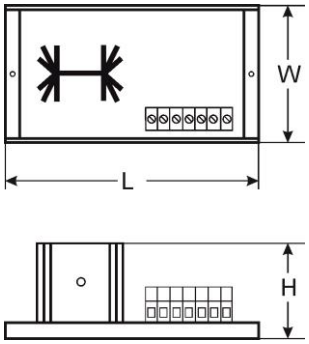

Table 4.

Dimensions	L=100, W=43, H=27 [+/- 2mm]
Mounting	tape or mounting screw x 2
Terminals	Φ0,41÷1,63 (AWG 26-14)
Net/gross weight	0,05/0,07 kg

2. Installation.

2.1. Requirements.

The DC/DC converter is to be mounted by a qualified installer, holding relevant permits and licenses (applicable and required for a given country) for step down installations. The module should be mounted in confined spaces with normal relative humidity (RH=90% maximum, no condensation) and temperature range from -10°C up to +40°C. The module should operate in vertical position in order to provide free and convectional air flow.

The module's load balance should be done prior to installation. During normal operation, the total current of the receivers should not exceed **I=1A** while the power drawn from the module should not exceed **Pmax=12W**, as shown in the Fig. 3.

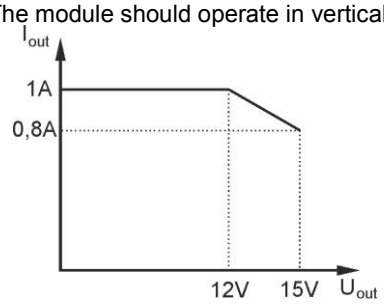

Fig.3. The maximum output current depending on the output voltage.

Proper operation of the module requires adequate current capacity of the power source; the power supply capacity should be calculated using the formula below:

$$P_{IN} = 1{,}25 \times P_{AUX}$$
$$(P_{IN} = 1{,}25 \times I_{AUX} \times U_{AUX})$$

Example:

The converter will supply the receivers with a capacity of P_{AUX} **= 12W** drawing a total current of I_{AUX} **= 1A** at the voltage U_{AUX} **= 12V**. The minimum power supply capacity must therefore amount to: P_{IN} **= 1,25 x 1A x 12V = 15W**.

The device should be mounted in a metal enclosure (cabinet). The rules for power supply, enclosures and shielding - according to application - must be observed in order to meet the requirements of LVD and EMC directives.

2.2. Installation procedure.

1. Mount the enclosure (cabinet, etc.) and lead cables through cable glands.
2. Mount the DC/DC converter with adhesive tape or mounting screws.
3. Supply DC voltage to the + IN, -IN terminals with correct polarization.
4. Switch on the DC voltage.
5. Use the V_{ADJ} potentiometer to set the required output voltage. The factory setting: 12V.
6. Switch off the DC voltage.
7. Connect the receivers' cables to the +AUX, -AUX connectors of the terminal block on the module's board.
8. Connect the device cables (alarm control panel, indicator, LED light, etc.) to the PSU technical output if necessary.
9. Switch on the DC voltage (the red IN LED should be permanently illuminated, the AUX green LED should be permanently illuminated).
10. Once the tests and operation control are performed, close the enclosure, cabinet, etc.

3. Converter 's module operation indication.

3.1. Technical output.

The converter is equipped with three diodes indicating operation status: IN, AUX, and PSU.

- **IN- red LED**: during normal status (DC power supply) it is lit continuously. No DC supply is indicated by switching off the IN LED.
- **AUX- green LED**: indicates DC supply status at the module's output. During normal status, it is lit continuously, in case of short circuit or overload the AUX led is off.
- **PSU- red LED**: indicates module's overload. During normal status, it is off, in case of short circuit or overload the LED lights continuously.

3.2. Technical output.

The converter is fitted with one technical output indicating failure of the DC / DC module.

- **PSU- OLP/SCP (overload/short-circuit) output**: - OC type output indicating overload/short-circuit of the module's output.

During normal operation, the output is shorted to the AUX - (0V). In case of failure, the module disconnects the output and it is in the hi-Z (high impedance) state during failure.

4. Maintenance and operation.

4.1. Converter overload.

The AUX output is protected with the PTC polymer fuse. If the load current exceeds Imax (110% ÷ 150% @ 25ºC of the converter capacity), the output voltage will be automatically disconnected, which will be signaled by switching off the green AUX LED, switching on the red PSU LED and a change in the status of the technical output. Voltage restoration requires disconnecting the output load for approx. 1 min.

5. Maintenance.

All maintenance procedures can be performed after disconnecting the converter from the power network. The converter does not require any specific maintenance; however, its interior should be cleaned with compressed air if used in dusty conditions.

WEEE LABEL

Waste electrical and electronic equipment must not be disposed of with normal household waste. According to the European Union WEEE Directive, waste electrical and electronic equipment should be disposed of separately from normal household waste.

Pulsar sp. j.
Siedlec 150, 32-744 Łapczyca, Poland
Tel. (+48) 14-610-19-40, Fax. (+48) 14-610-19-50
e-mail: biuro@pulsar.pl, sales@pulsar.pl
http:// www.pulsar.pl, www.zasilacze.pl