HPSBOC 11A12C

v.1.1

HPSBOC 13,8V/10A/17Ah/OC

Buffer switch mode power supply unit

with technical outputs.

EN

Edition: 9 from 01.03.2018

Supercedes edition: 8 from 01.06.2016

GREEN POWER plus

Features:

- DC 13,8V/10A uninterruptible power supply*
- fitting battery: 17Ah/12V
- wide range of mains supply: 176÷264V
- high efficiency 83%
- battery charging and maintenance control
- excessive discharging (UVP) protection
- jumper selectable battery charge current 1A/4A
- battery output full protection against short-circuit and reverse polarity connection
- LED indication
- EPS technical output indicating AC power loss – OC and relay type
- PSU technical output indicating PSU failure – OC and relay type
- LoB technical output indicating battery low voltage – OC and relay type
- protections:
  - SCP short-circuit protection
  - OVP overvoltage protection
  - overvoltage protection
  - against sabotage
  - overload protection (OLP)
- warranty – 2 year from the production date

CONTENTS:

1. Technical description.

1.1 General description.

A buffer PSU is intended for an uninterrupted supply to devices requiring stabilized voltage of **12V DC (+/-15%).** The PSU provides voltage of **U=13,8V DC.** Current efficiency:

1. Output current 10A + 1A battery charge*
2. Output current 7A + 4A battery charge*
Total device current + battery: 11A max*

In case of power decay, a battery back-up is activated immediately. The PSU is constructed based on the switch mode PSU, with high energy efficiency. The PSU is housed in a metal enclosure (colour RAL 9003) which can accommodate a 17Ah/12V battery. A micro switch indicates door opening (front cover).

OPTIONAL POWER SUPPLY CONFIGURATIONS:
(visualisation available at: www.pulsar.pl)

BATTERY 17Ah:

1. Buffer power supply unit HPSBOC 13,8V/4x2/17Ah.
- HPSBOC11A12C + LB4 4x2A (AWZ576) + 17Ah

2. Buffer power supply unit HPSBOC 13,8V/8x1A/17Ah.
- HPSBOC11A12C + LB8 8x1A (AWZ579 or AWZ580) + 17Ah

3. Buffer power supply unit HPSBOC 13,8V/2x12V/10A/17Ah.
- HPSBOC11A12C + 2 x RN500 (13,8V/12V) + 17Ah

4. Buffer power supply unit HPSBOC 13,8V/12V/4x1A/17Ah.
- HPSBOC11A12C + RN500(13,8V/12V) + LB4 4x1A (AWZ575 or AWZ576) + 17Ah

5. Buffer power supply unit HPSBOC 13,8V/(5V÷7,4V)/2A/17Ah.
- HPSBOC11A12C + DCDC20 (5V÷7,4V/2A) + 17Ah

* See chart 1

BATTERY 7Ah:

1. **Buffer power supply unit HPSBOC 13,8V/16x0,5A/7Ah.**
   - HPSBOC11A12C + 2 x LB8 8x0,5A (2 x AWZ578 or AWZ580) + 7Ah
2. **Buffer power supply unit HPSBOC 13,8V/2x12V/8x1A/7Ah.**
   - HPSBOC11A12C + 2 x RN500(13,8V/12V+ 2x LB4 4x1A (AWZ575 or AWZ576) + 7Ah
3. **Buffer power supply unit HPSBOC 13,8V/2x5V÷7,4V/2x2A/7Ah.**
   - HPSBOC11A12C + 2 x DCDC20 (2x5V÷7,4V/2x2A) + 7Ah
4. **Buffer power supply unit HPSBOC 13,8V/5V÷7,4V/4x0,5A/7Ah.**
   - HPSBOC11A12C + DCDC20 (5V÷7,4V/2A) + LB4x0,5A (AWZ574 or AWZ576) + 7Ah

1.2 Block diagram (fig.1)

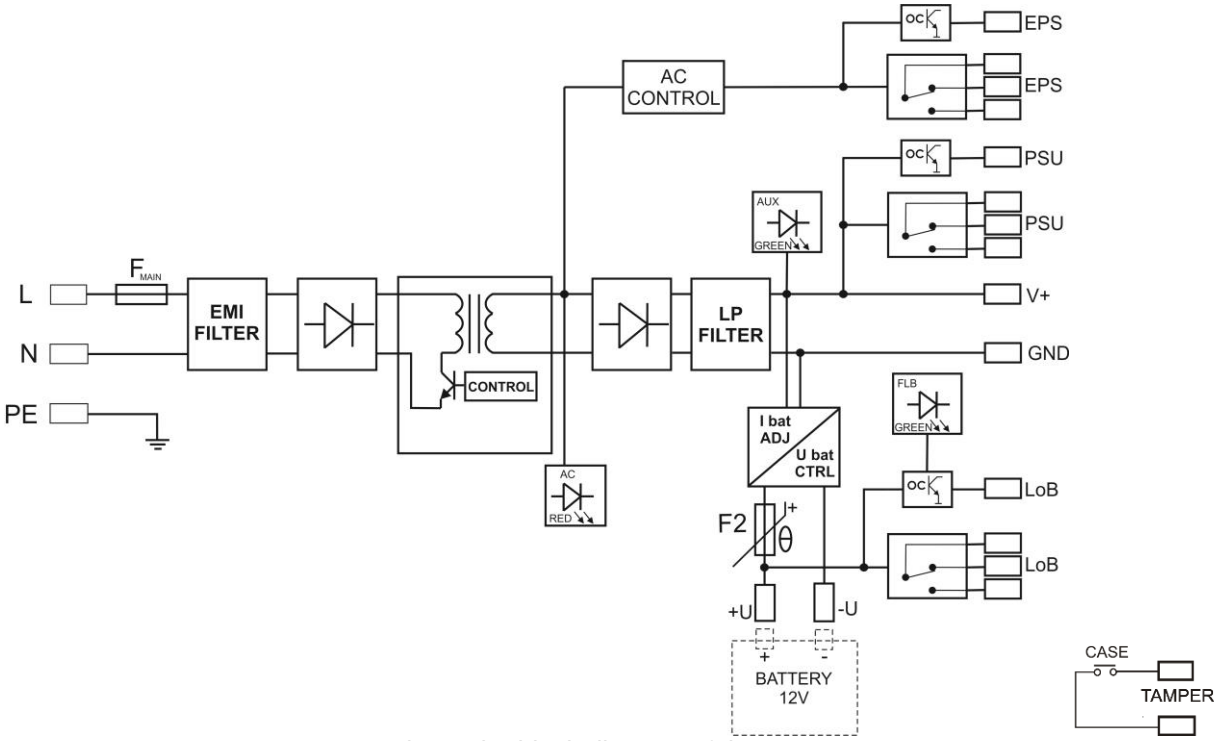

Fig.1. The block diagram of the PSU.

1.3 Description of the module's components and connectors.

Table 1. Elements of the module's (see fig. 2).

Element no.	Description
[1]	LED indicating presence of AC power
[2]	LED indicating presence of DC power
[3]	LED indicating correct battery voltage
[4]	**EPS -** AC absence technical output – relay type
[5]	**PSU -** output indicating DC absence/PSU failure - relay type
[6]	**LoB -** output indicating battery low voltage - relay type
[7]	**EPS -** AC absence technical output – OC type
[8]	**PSU -** output indicating DC absence/PSU failure - OC type
[9]	**LoB -** output indicating battery low voltage - OC type
[10]	**V_{ADJ}** - potentiometer, **DC** voltage adjustment
[11]	**+V ,-V-** DC supply output
[12]	**L-N** 230V AC power connector, PE protection connector
[13]	Battery connectors: +BAT =red, - BAT = black
[14]	LED indication on the front panel
[15]	Battery charging current selection • Ibat =1A • Ibat =4A Legend: dip switch installed dip switch removed

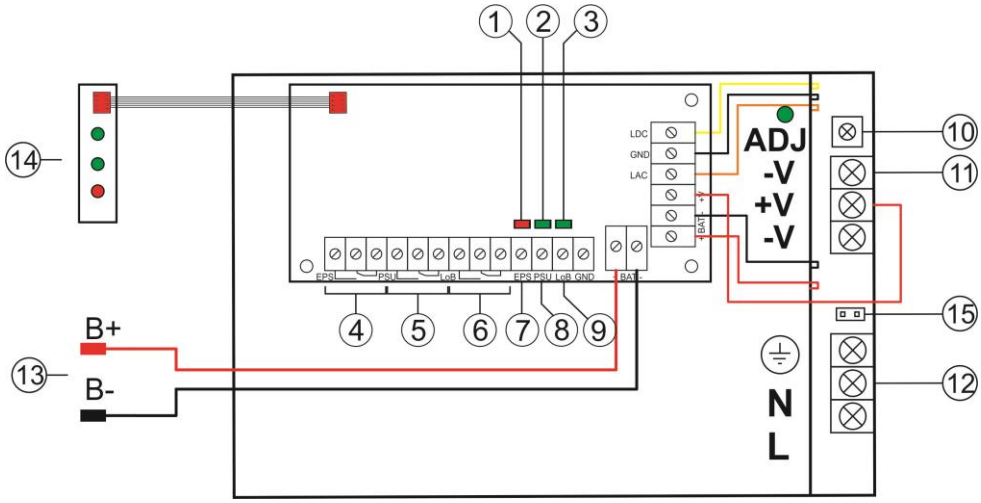

Fig. 2. The view of the PSU.

Description of PSU components and connectors (tab.2, fig.3).

Element no. [Fig. 3]	Description
[1]	**PSU module**
[2]	**TAMPER,** contact, sabotage protection **(NC)**

Tab.2. Output terminals of the PSU.

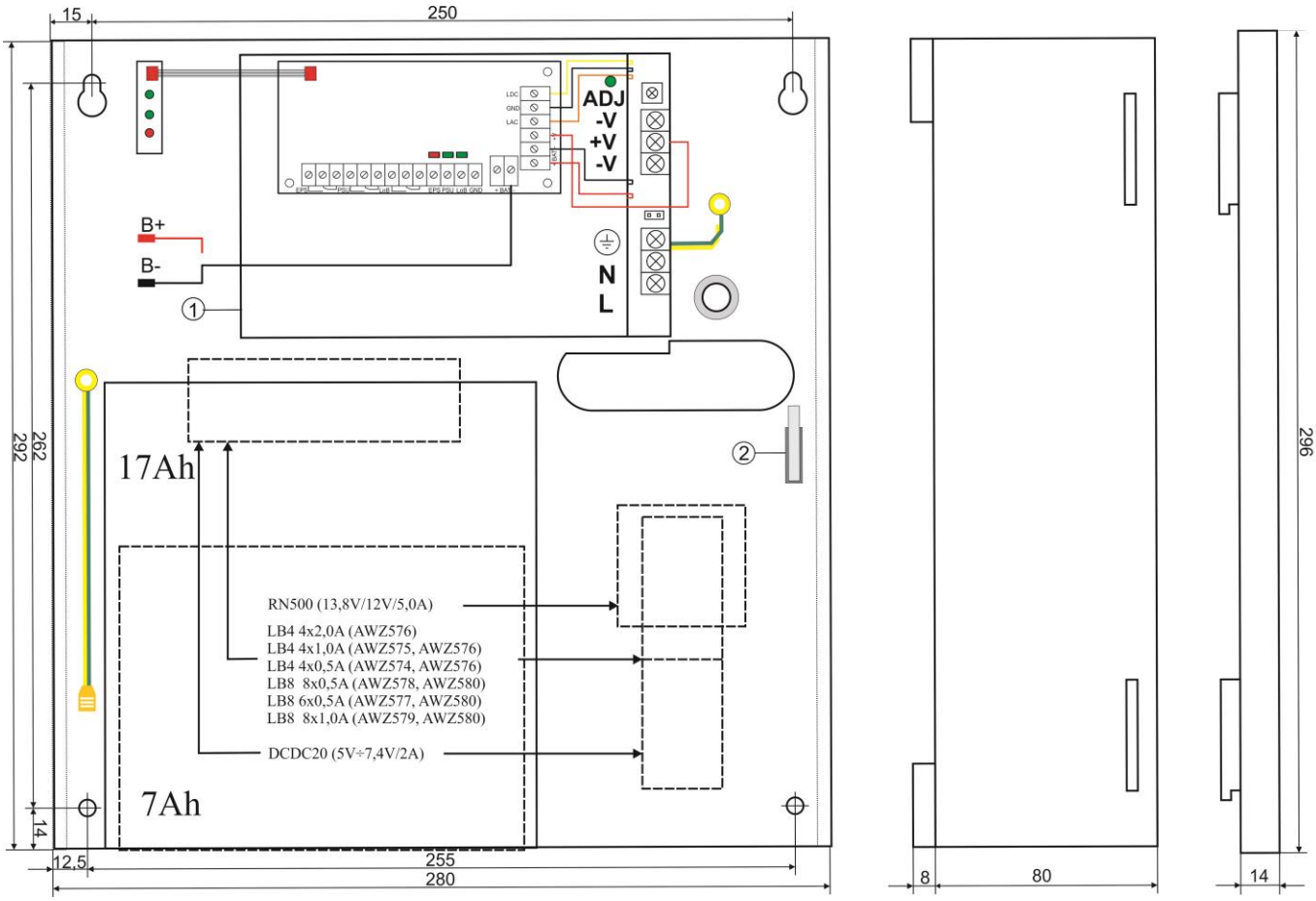

Fig.3. The view of the PSU.

1.4 Specifications:

- electrical parameters (tab.3)
- mechanical parameters (tab.4)
- operation safety (tab.5)
- operating parameters (tab.6)

Electrical parameters (tab. 3)

Mains supply	176÷264V AC
Current up to	1,4A@230V AC
Supply power	155W max.
Efficiency	83%
Output voltage	11V ÷ 13,8V DC – buffer operation 9,5V ÷ 13,8V DC – battery-assisted operation
Output current t_{AMB}<30°C	**10A + 1A battery charge - see chart 1** **7A + 4A battery charge - see chart 1**
Output current t_{AMB}=40°C	**6,7A + 1A battery charge - see chart 1** **3,7A + 4A battery charge - see chart 1**
Voltage adjustment range	12÷14VDC
Ripple	120mV p-p max.
Current consumption by PSU systems	60 mA
Battery charge current	1A or 4A max. @ 17Ah (± 5%) – jumper selectable
Short-circuit protection SCP	electronic, automatic recovery
Overload protection OLP	105-150% of power supply, automatic recovery
Battery circuit protection SCP and reverse polarity connection	polymer fuse
Surge protection	varistors
Overvoltage protection OVP	>16V (automatic recovery)
Excessive discharge protection UVP	U<9,5V (± 5%) – disconnect of connection battery
Tampering protection system: - TAMPER – indicating unwanted opening of the PSU's enclosure	- a microswitch, NC contacts (enclosure closed) 0,5A@50V DC (max.)
LED indication: - AC diode indicating AC power status - AUX diode indicating DC power status at the PSU output - BAT diode indicating battery voltage level	 - red, normal status – on, failure: off - green, normal status – on, failure: off - green, normal status – on, failure: off
Technical outputs: - EPS; output indicating AC power failure - PUS; output indicating DC absence/PSU failure - LoB output indicating battery low voltage	 - relay type: 1A@ 30VDC/50VAC, time lag: approx. 10s. - OC type, 50mA max., normal status: L (0V) level, failure: hi-Z level, time lag: 10s. - relay type: 1A@ 30VDC/50VAC, - OC type, 50mA max., normal status: L (0V) level, failure: hi-Z level - relay type: 1A@ 30VDC/50VAC, - OC type, 50mA max., normal status: (U_{BAT} >11,5V): L (0V) level, failure: (U_{BAT} <11,5V): hi-Z level The power supply unit does not feature a battery detection function.

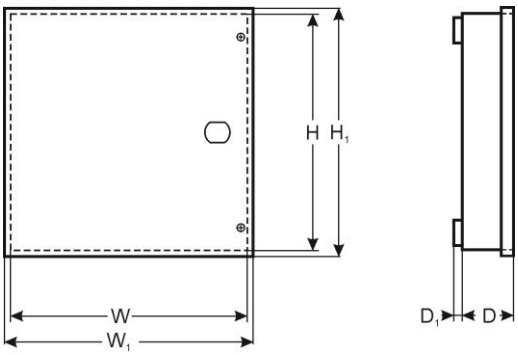

Mechanical parameters (tab. 4)

Dimensions	W=280, H=292, D+D_1=82+8 [+/- 2mm] W_1=285, H_1=296 [+/- 2mm]
The dimensions of the battery compartment	190x170x75mm (WxHxD) max
Fixation	See figure 2
Net/gross weight	2,5kg / 2,7kg
Enclosure	Steel plate, DC01 0,7mm colour: RAL 9003
Closing	Cheese head screw x 2 (at the front), (lock assembly possible)
Connectors	Power supply: Φ0,63-2,50 (AWG 22-10) Outputs: Φ0,63-2,50 (AWG 22-10), battery output BAT: 6,3F-2,5 TAMPER output: wires
Notes	The enclosure does not adjoin the assembly surface so that cables can be led.

Operation safety (tab.5)

Protection class PN-EN 60950-1:2007	I (first)
Protection grade PN-EN 60529: 2002 (U)	IP20
Electrical strength of insulation: - between input and output circuits of the PSU (I/P-O/P) - between input circuit and PE protection circuit (I/P-FG) - between output circuit and PE protection circuit (O/P-FG)	 3000 V/AC min. 1500 V/AC min. 500 V/AC min.
Insulation resistance: - between input circuit and output or protection circuit	 100 MΩ, 500V/DC

Operating parameters (tab.6)

Operating temperature	-10ºC...+40ºC (see: chart 1)
Storage temperature	-20ºC...+60ºC
Relative humidity	20%...90%, without condensation
Vibrations during operation	unacceptable
Impulse waves during operation	unacceptable
Direct insulation	unacceptable
Vibrations and impulse waves during transport	According to PN-83/T-42106

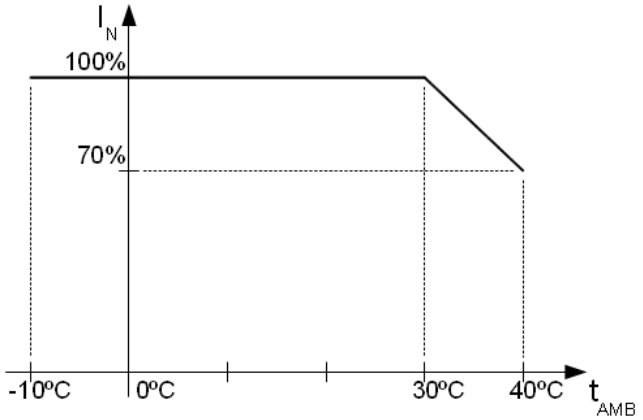

Chart 1. Acceptable output current from the PSU depending on ambient temperature.

2. Installation.

2.1 Requirements.

The buffer PSU shall be mounted by a qualified installer with appropriate permissions and qualifications for 230V/AC installations and low-voltage installations (required and necessary for a given country). The device shall be mounted in confined spaces, according to the environment class II, with normal air humidity (RH=90% max. without condensation) and the temperature from -10°C to +40°C. The PSU shall work in a vertical position that guarantees sufficient convectional air-flow through ventilating holes of the enclosure.

Before installation, prepare a PSU load balance.

1. Output current 10A + 1A battery charge*

2. Output current 7A + 4A battery charge*

Total device current + battery: 11A max*

* Siehe Diagramm 1

As the PSU is designed for a continuous operation and is not equipped with a power-switch, therefore an appropriate overload protection shall be guaranteed in the power supply circuit. Moreover, the user shall be informed about the method of unplugging (usually through assigning an appropriate fuse in the fuse-box). The electrical system shall follow valid standards and regulations.

2.2 Installation procedure.

1. Before installation, cut off the voltage in the 230V power-supply circuit.
2. Mount the PSU in a selected location and connect the wires.
3. Connect the power cables (~230Vac) to L-N clips of the PSU. Connect the ground wire to the clip marked by the earth symbol PE (PSU module connector). Use a three-core cable (with a yellow and green PE protection wire) to make the connection. Lead the cables to the appropriate clips through the insulating bushing of the connection board.

The shock protection circuit shall be performed with a particular care, i.e. the yellow and green wire coat of the power cable shall stick to one side of the terminal - marked with '⏚' symbol on the PSU enclosure. Operation of the PSU without the properly made and fully operational shock protection circuit is UNACCEPTABLE! It can cause a device failure or an electric shock.

---

4. Connect the receivers' cables to the terminals V+ (+), V-(-) of the PSU module.
5. Connect the power (~230V)
6. Connect the battery (mind the colours):
- battery output (+V): BAT+ cable / red,
- battery output (0V): BAT – cable / GND / black.
7. Check the PSU operation indicator: green LED.
8. Check the PSU output voltage:
- the PSU voltage without load should amount to U=13,8V DC.
9. After installing and checking proper working, the enclosure can be closed.

3. Operating status indication.

3.1 LED indication of operating status.

The PSU is equipped with 3 diodes on the front panel:

RED LED:
- on – the PSU is supplied with 230V AC
- off – no 230V AC supply

GREEN LED:
- on – DC voltage in the AUX output of the PSU
- off – no DC voltage in the AUX output of the PSU
- on – PSU's voltage U_{BAT} > 11,5V
- off – PSU's voltage U_{BAT} < 11,5V

Moreover, the PSU is equipped with 3LEDs on the PCB board:
- red LED (Fig.2, element 1) normal status (AC power): permanently illuminated. AC power absence is indicated by the AC diode going out.
Caution! LED indicates power absence if the outage lasts >10s.

- green LED (Fig.2, element 2) indicates DC power at the PSU output. Under normal status the diode is permanently illuminated. In case of a short circuit or an overload, the diode is off.

- green LED (Fig.2, element 3) indicates battery voltage level. Under normal status (U_{BAT} > 11,5V) the diode is permanently illuminated. In case of decrease of battery voltage (U_{BAT} < 11,5V) the diode is off.

3.2 Technical outputs

The PSU has indication outputs:

- **EPS - absence of AC supply output**:

- OC type output that indicates AC power loss. Under normal status, with 230V AC supply, the output is connected to ground (L level – 0V). In case of power loss, the PSU will switch the output into high impedance state hi-Z after approx. 10s.
- relay output indicating the absence of AC supply. In case of power loss, the PSU module will switch the relay contacts after approx. 10 seconds.

CAUTION! In Fig.2. the contact set in the potential-free status corresponds to a state with no AC power (AC power failure).

- **PSU – technical output indicating absence of DC voltage at the PSU**:

- OC type output indicating the PSU failure. In normal state (during correct operation) the output is connected to ground (L level – 0V). In case of absence of DC voltage at the output (e.g. short circuit), the output is switched into high impedance state – hi-Z.
- relay output. In case of a failure, the contacts of the relay change over.

CAUTION! In the Fig.2. the set of contacts shows a potential-free status of the relay which corresponds to a state with no DC power (PSU failure).

- **LoB – technical output indicating battery voltage**:

- OC type output. Under normal status (U_{BAT} > 11,5V) the output is connected to ground (L level – 0V). In case of decrease of battery voltage (U_{BAT} < 11,5V) the output is switched into high impedance state – hi-Z.
- relay output. In case of a battery voltage drop U_{BAT} < 11,5V, the contacts of the relay change over.

The power supply unit does not feature a battery detection function. In the case of no battery or non battery connected, the output is in the normal mode.

CAUTION! In the Fig.2. the set of contacts shows a potential-free status of the relay which corresponds to a state with low battery level (U_{BAT} <11,5V).

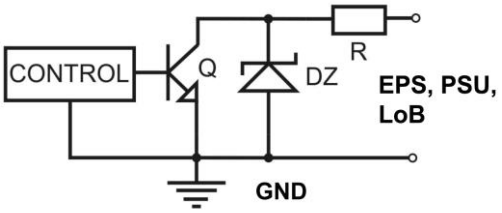

Fig. 4. Electrical diagram of OC outputs.

4. Operation and use.

4.1 Overload or short circuit of the PSU output (SCP on).

In case of overload, the output voltage is automatically shut off, and so is the LED indicator. The restoration of the voltage takes place immediately after the failure (overload) is over.

4.2 Battery-assisted operation.

In case of a main power outage, the device is immediately switched into a battery-assisted operation.

The PSU is equipped with the discharged battery disconnection system. During the battery-assisted operation, reducing voltage below 9,5V at the battery terminals will cause battery disconnection.

4.3 Maintenance.

Any and all maintenance operations may be performed following the disconnection of the PSU from the power supply network. The PSU does not require performing any specific maintenance measures, however, in case of significant dust rate, its interior is recommended to be cleaned with compressed air. In case of fuse replacement, use a replacement of the same parameters.

WEEE MARK

According to the EU WEE Directive – It is required not to dispose of electric or electronic waste as unsorted municipal waste and to collect such WEEE separately.

The power supply unit is adapted for a sealed lead-acid battery (SLA). After the operation period it must not be disposed of but recycled according to the applicable law.

Pulsar sp. j.
Siedlec 150, 32-744 Łapczyca, Poland
Tel. (+48) 14-610-19-40, Fax. (+48) 14-610-19-50
e-mail: biuro@pulsar.pl, sales@pulsar.pl
http:// www.pulsar.pl, www.zasilacze.pl