RSG64
v1.2
RSG64 6-port switch with power supply for 4 IP cameras, RACK

Edition: 4 from 02.03.2020
Supercedes the edition: 3 from 23.09.2019

EN**

Features:

- Switch 6 ports
  4 PoE ports 10/100/1000Mb/s (data transfer and power supply)
  2 ports 10/100/1000Mb/s (UpLink)
- 30 W for each PoE port, supports devices complaint with the IEEE802.3af/at **(PoE+)** standard
- Supports auto-learning and auto-aging of MAC addresses (1K size)
- LED indication
- Metal enclosure RACK 19” 1U
  - color black RAL 9005
- warranty – 2 year from the production date

Example of use

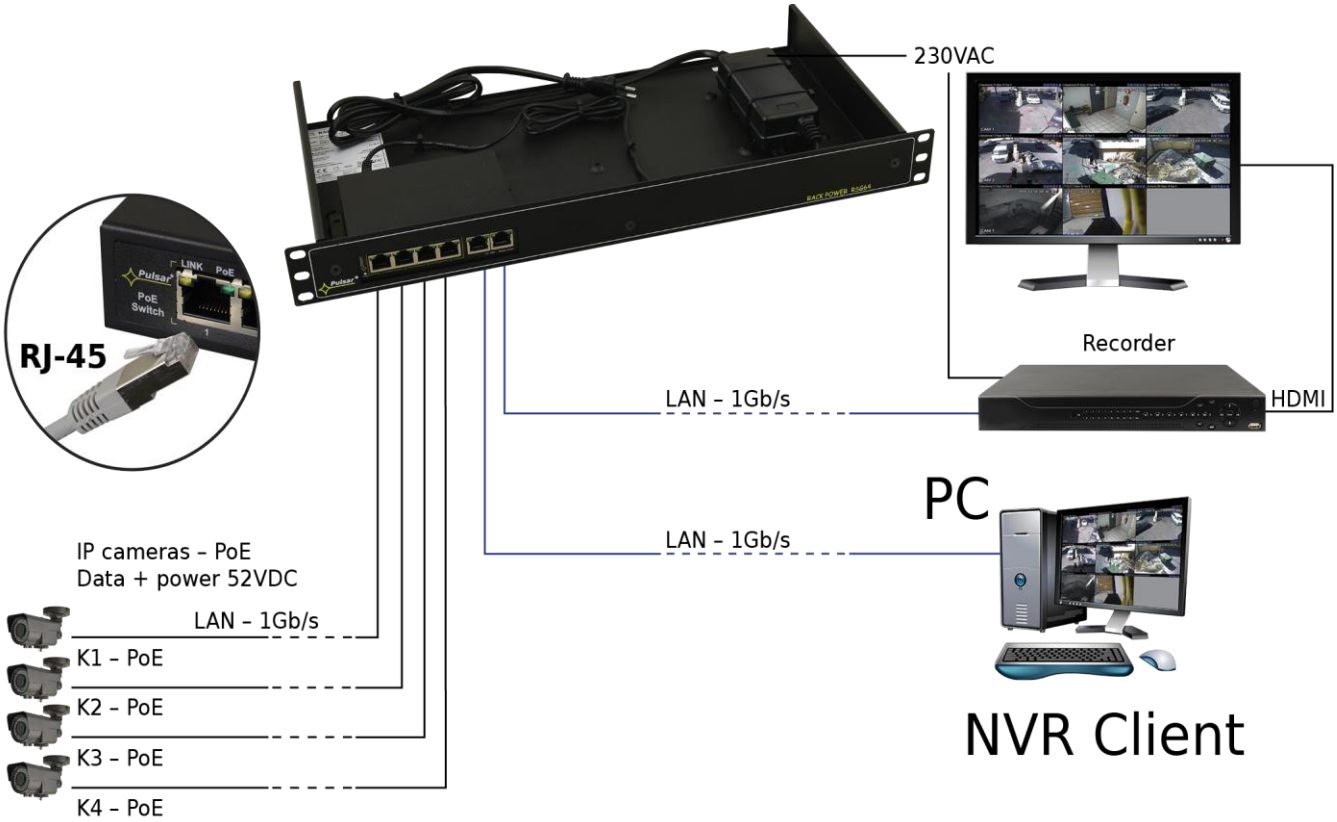

1. Technical description

1.1. General description.

The RSG64 is a 6-port switch in a RACK 19” metal housing with integrated power supply.
Automatic detection of any devices powered in the PoE/PoE+ standard is enabled at the 1 – 4 ports of the switch. The UP LINK ports is used for connection of another network device via RJ45 connector. The LEDs at the front panel indicate the operation status (description in the table 4).

The PoE technology ensures a network connection and reduces installation costs by eliminating the need to supply a separate power cable for each device. This method allows supplying other network devices, such as IP phone, wireless access point or router.

1.2 Block diagram.

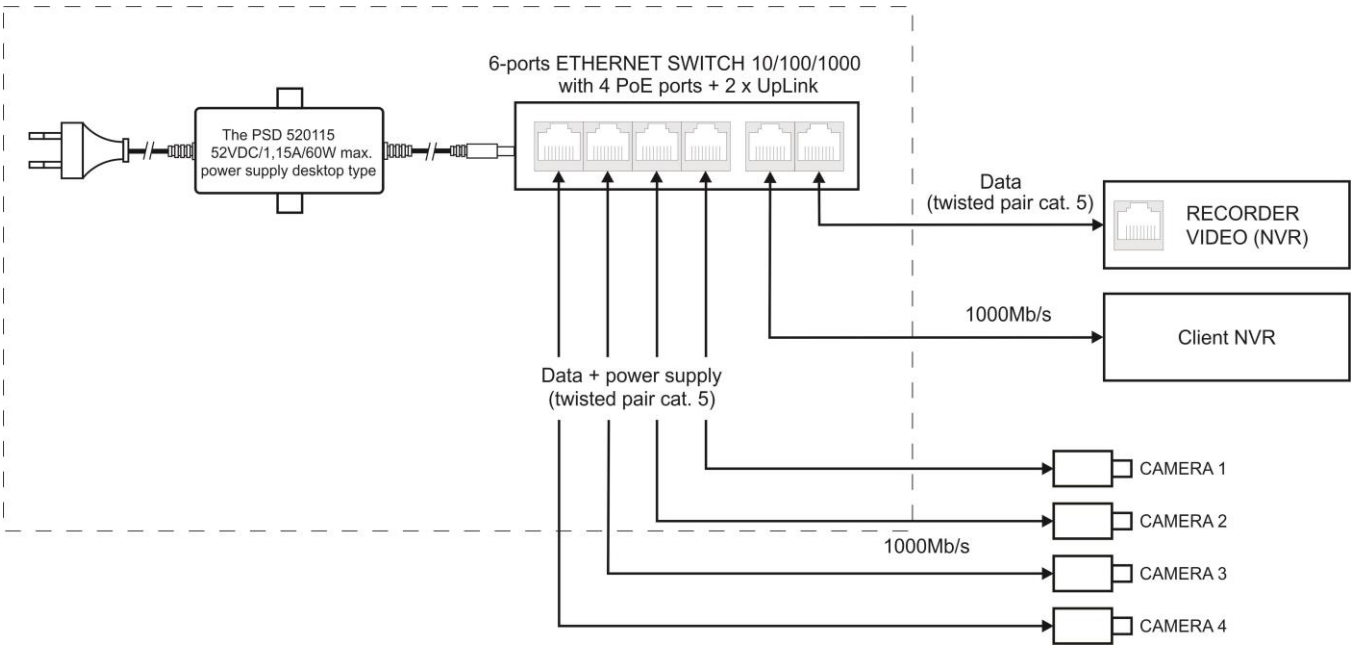

Fig. 1. Block diagram.

1.3. Description of components and connectors

Table 1. (see Fig.2)

Element no. (Fig. 2)	Description
[1]	2 x UpLink port
[2]	4 x PoE port (1÷4)
[3]	Switch mode power supply for the switch 52VDC/1,15 A/60 W
[4]	230 V power cord

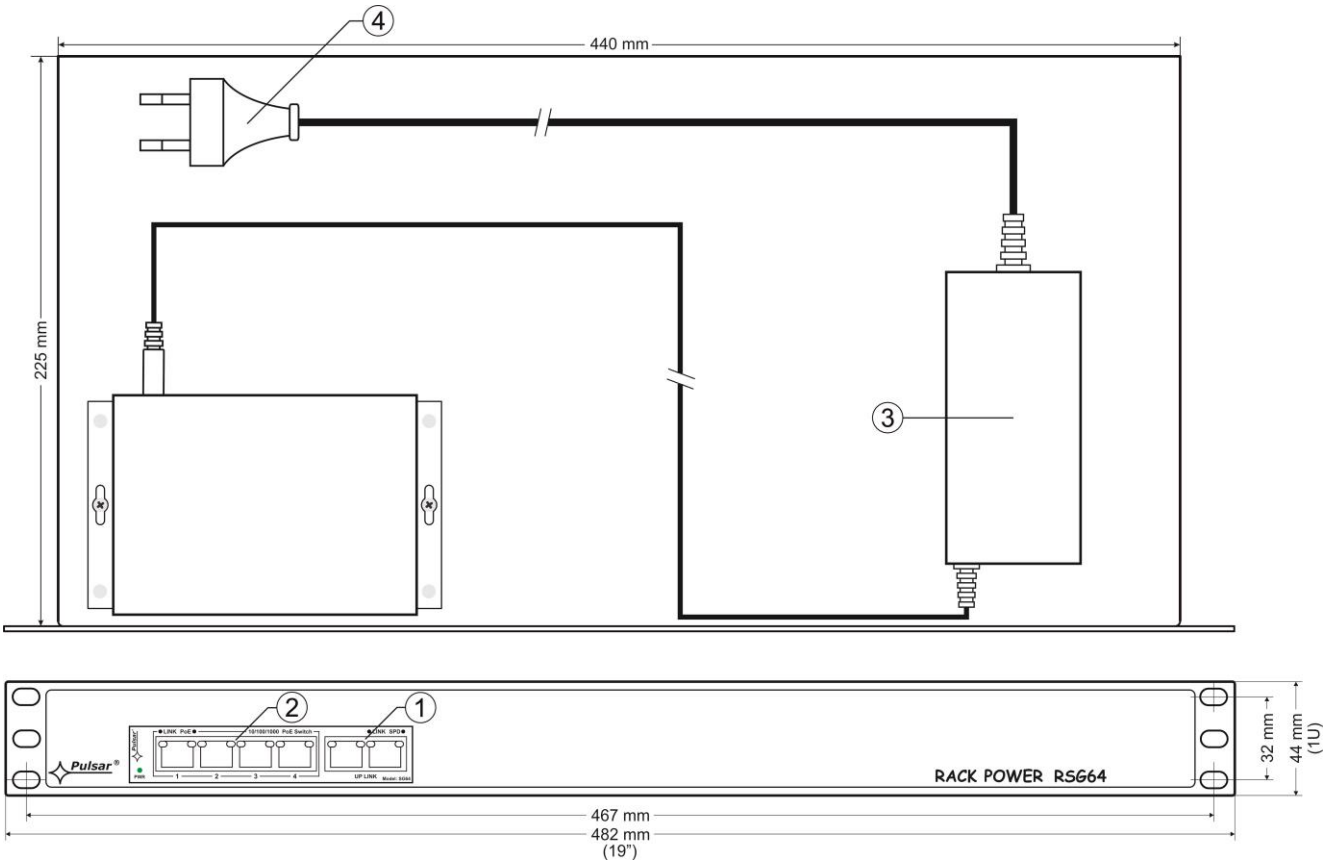

Fig. 2. The enclosure view.

1.4. Technical parameters (Table 3.)

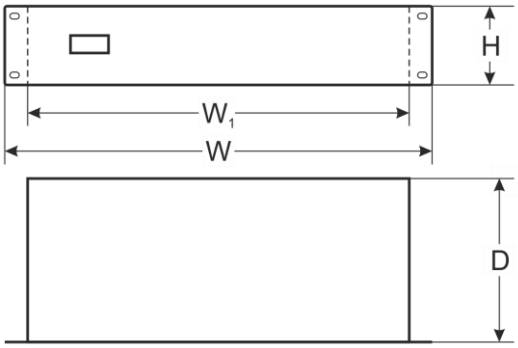

Table 3.

Ports	6 10/100/1000Mb/s ports (4 x PoE + 2 x UpLink) with connection speed auto-negotiation and MDI/MDIX Auto Cross
PoE power supply	IEEE 802.3af/at (1÷4 ports), 52 V DC / 30 W at each port *
Protocols, Standards	IEEE802.3, 802.3u, 802.3x CSMA/CD, TCP/IP
Bandwidth	8,8Gbps
Transmission method	Store-and-Forward
Optical indication of operation	Switch power supply; Link/Act; PoE Status
Power supply	~100-240 V; 50/60Hz; 1,5 A
Operating conditions	temperature -10°C ÷ 40°C, relative humidity 5% - 90%, no condensation
Mounting dimensions	W=19” H=1U D=227
Dimensions	W=482 W_1=440 H=44 D=227 [+/-2mm]
Enclosure	RACK 19″ 1U, Steel plate, DC01 1,0mm color RAL 9005
Gross/Net weight	2,1/2,3kg
Protection class EN 60950-1:2007	II (second)
Storage temperature	-20°C ÷ 60°C
Declarations, warranty	CE, 2 year from the production date

* The given value of 30 W per port is the maximum value. The total power consumption should not exceed 48 W.

2. Installation

2.1. Installation procedure

1. The unit should be mounted by a qualified installer, holding relevant permits and licenses (applicable and required for a given country) for 230 V interference and low-voltage installations.
2. The unit should be mounted in confined spaces, in accordance with the 2nd environmental class, with normal relative humidity (RH=90% maximum, without condensation) and temperature from -10°C to +40°C.
3. The switch shall operate in a horizontal position in order to ensure free air convection in the Rack cabinet. The switch load balance should be done prior to installation. The given value of 30W per port is the maximum value referring to a single output. The total power consumption should not exceed 48 W.
   The increased demand for power is particularly evident in the case of cameras with heaters or infrared illuminators - when launching these features, the power consumption increases rapidly, which may adversely affect the operation of the switch.
   The device is designed for a continuous operation and is not equipped with a power-switch. Therefore, an appropriate overload protection in the power supply circuit should be provided. Moreover, the user should be informed how to disconnect the power supply unit from the mains supply (usually by assigning an appropriate fuse in the fuse box). The electrical system shall be made in accordance with applicable standards and regulations.

2.2. Installation procedure

1. Mount the switch in a RACK 19 ” cabinet.
2. Connect the plug of the power supply switch to the 230 V socket.
3. Make sure that the device is installed in such a manner and place, that the free flow of air around the device is ensured.
4. Connect the power (230 V).
5. Connect the camera wires to the RJ45 connectors (PoE connectors).
6. Check the optical indication of the switch operation.

Connection schemes

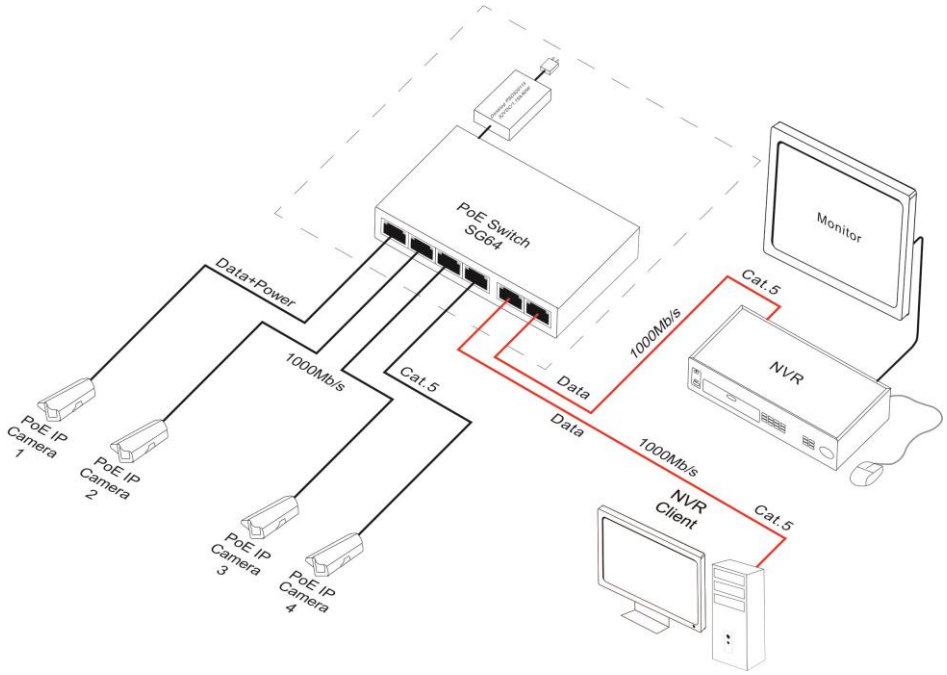

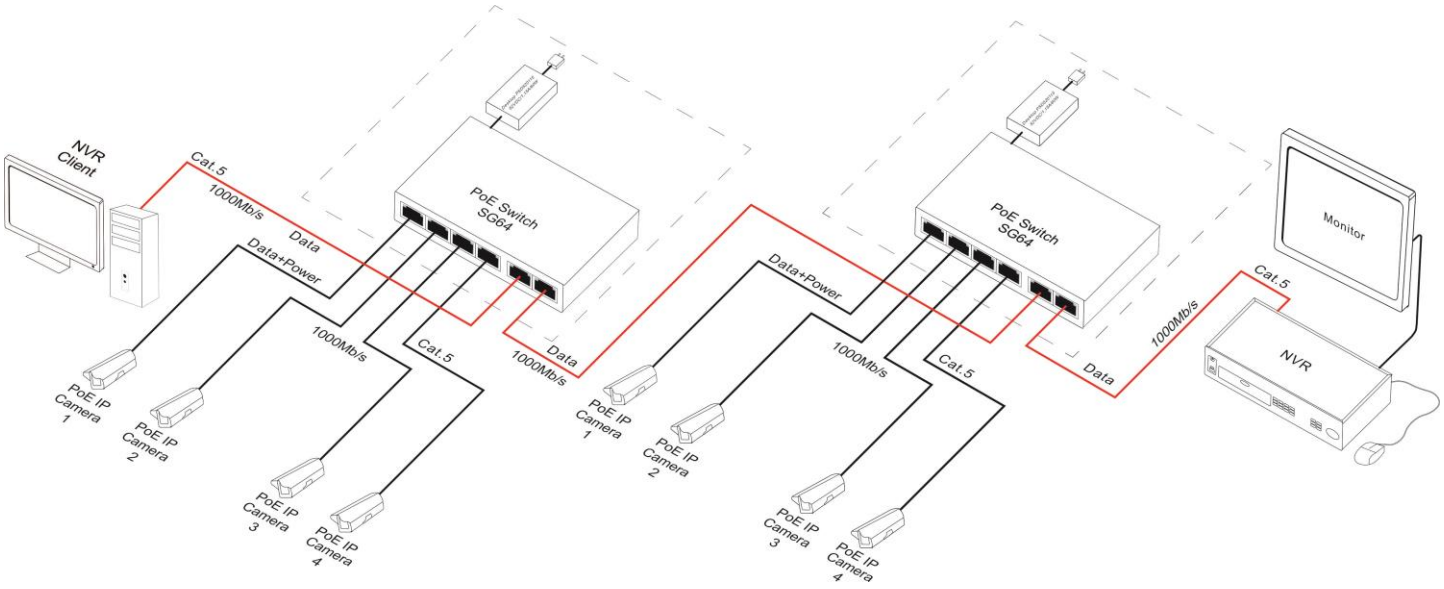

3. Operation indication.

Table 4. Operation indication

OPTICAL INDICATION OF THE SWITCH's POWER SUPPLY

GREEN LED LIGHT (Power) **Indication of the switch's power supply** **PWR**	**OFF** – no power supply of the switch **ON** – power supply on, normal operation

OPTICAL INDICATION AT THE PoE PORTS (1÷4)

DIODA LED ZIELONA (PoE) **Indication of the PoE power supply at the RJ45 ports**	**OFF**- no power supply at the RJ45 port (the device is not connected or not compliant with the IEEE802.3af/at standard) **ON** – supply at the RJ45 port **Blinking** – short-circuit or output overload
YELLOW LED LIGHT (LINK) **The connection status of LAN devices, 10/100/1000Mb/s and data transmission**	**OFF**- no connection **ON** - the device is connected; 10/100/1000Mb/s **Blinking** – data transmission

OPTICAL INDICATION AT THE UP LINK PORTS

GREEN LED LIGHT	**OFF**- no connection/ the device is connected; 10/100Mb/s **ON** – the device is connected 1000Mb/s
YELLOW LED LIGHT (LINK) **The connection status of LAN devices, 10/100/1000Mb/s and data transmission**	**OFF**- no data transmission **ON** - the device is connected: 10/100/1000Mb/s **Blinking** – data transmission

WEEE LABEL

Waste electrical and electronic equipment must not be disposed of with normal household waste. According to the European Union WEEE Directive, waste electrical and electronic equipment should be disposed of separately from normal household waste.

Pulsar sp. j.
Siedlec 150, 32-744 Łapczyca, Poland
Tel. (+48) 14-610-19-40, Fax. (+48) 14-610-19-50
e-mail: biuro@pulsar.pl, sales@pulsar.pl
http:// www.pulsar.pl, www.zasilacze.pl